鑫华东
XINHUADONG

空气悬浮高速离心鼓风机

AIR SUSPENSION HIGH-SPEED CENTRIFUGAL BLOWER

高效/节能/无油/免维护/低噪音

HIGH EFFICIENCY/ENERGY SAVING/OIL-FREE/MAINTENANCE-FREE/LOW NOISE

地　　址：山东济南章丘明水经济技术开发区
销 售 部：0531-83486808
技 术 部：0531-83471388
服务热线：4008-797-786
邮　　编：250201
邮　　箱：huadong688@163.com
网　　址：www.hdfj11.com

Add: Mingshui Economic and Technological Development Zone, Zhangqiu, Jinan, Shandong
Sales Department: 0531-83486808
Technical Department: 0531-83471388
Service Hotline: 4008-797-786
Postcode: 250201
E-mail: huadong688@163.com
http: www.hdfj11.com

山东华东风机有限公司
SHANDONG HUADONG BLOWER CO.,LTD

COMPANY PROFILE

公司简介

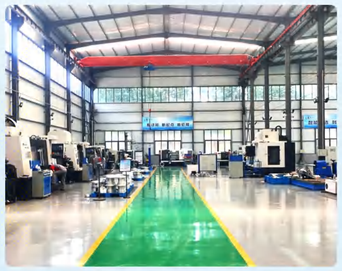

山东华东风机有限公司，成立于2010年，位于山东济南章丘明水经济技术开发区，是国家级专精特新小巨人、国家级高新技术企业，占地面积10万平方米，7万平米的标准厂房，200多台数控加工设备，职工500余人，以博士、硕士为核心的研发团队60多人，拥有国家专利及各类知识产权100多项。

Shandong Huadong Blower Co., Ltd., established in 2010, is located in the Ming Shui Economic and Technological Development Zone, Zhangqiu District, Jinan, Shandong Province. The company covers an area of 100,000 square meters, with 70,000 square meters of standard workshops. It operates over 200 CNC machining equipment and employs more than 500 staff members. The R&D team, comprising over 60 Ph.D. and Master's degree holders, has been granted over 100 national patents and various intellectual property rights.

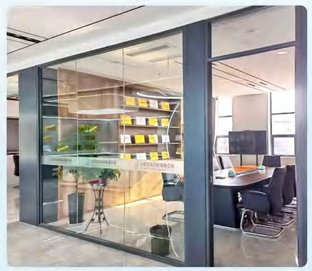

发展历程
Development process

2007-2008年
章丘市消费者满意单位

2010-2012年
章丘市纳税先进单位
章丘市纳税十强单位
章丘市守合同重信用企业

2014年
济南市守合同重信用企业
济南市著名商标

2015年
ISO9001质量管理体系认证

2016年
山东著名商标
文明诚信私营企业
安全生产标准化三级企业
中国通用机械工业协会风机分会会员单位

2017年
工人先锋号
先进共产党员经营户

2018-2019年
章丘质量奖
欧盟CE认证
国家高新技术企业
隐形冠军“培训库”
山东省“专精特新”中小企业

2020年
欧盟CE认证
环境管理体系认证
章丘质量奖-个人奖
ISO9001质量管理体系认证
职业健康安全管理体系认证
中国通用机械工业协会分会会员单位

2021-2022年
山东省装备制造业科技创新一等奖
“能效之星”装备产品目录
质量管理体系认证证书
济南优势工业产品目录
绿色工厂

2023年
揭榜挂帅
优秀节能之星
山东省重点项目
山东制造 齐鲁精品
国家级专精特新“小巨人”

2024年
山东省装备制造业科技创新一等奖
2024年济南市创新工业产品
第二届济南工业绿色低碳发展创新成果奖

空气悬浮系列
Air Suspension Series

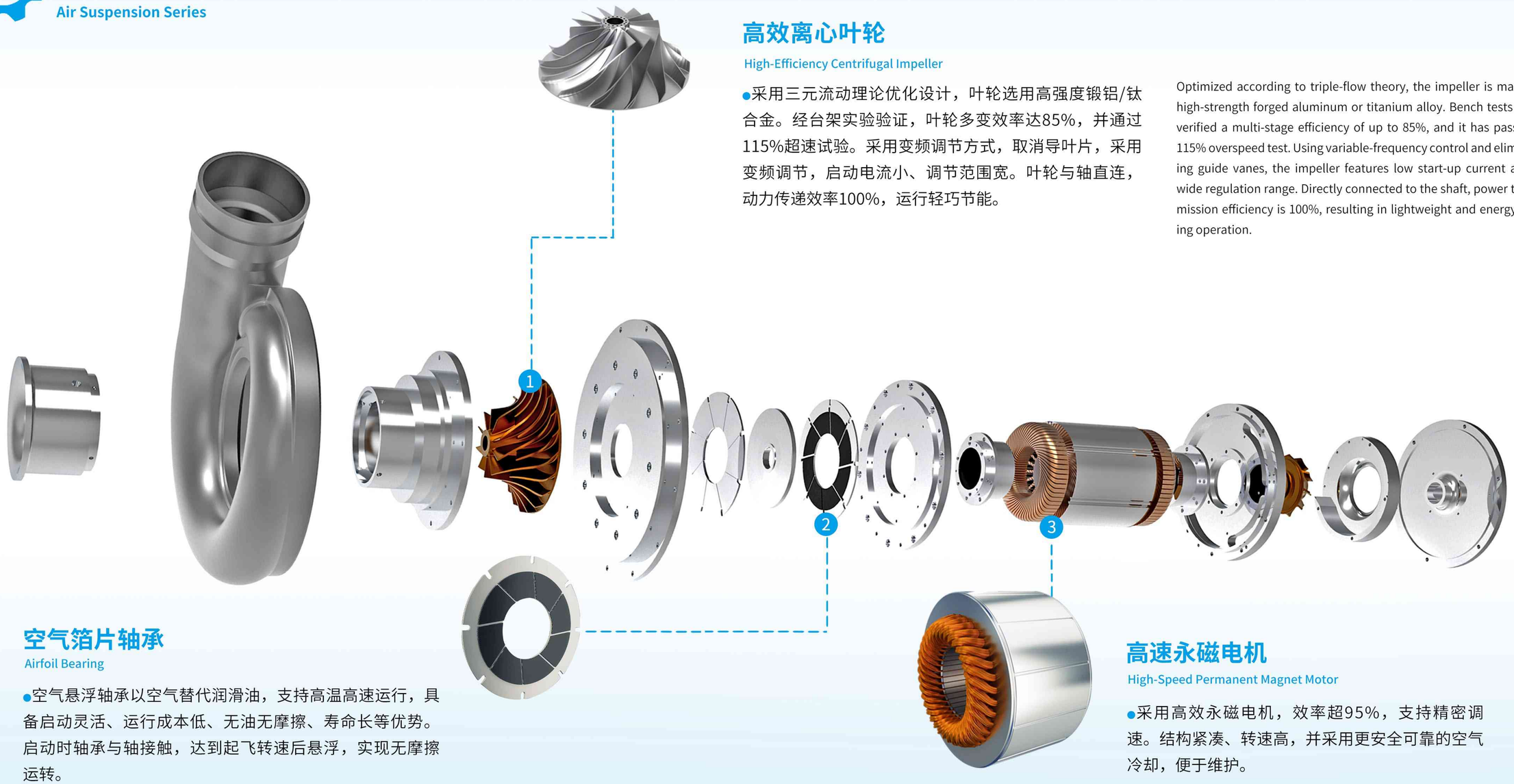

高效离心叶轮
High-Efficiency Centrifugal Impeller

●采用三元流动理论优化设计，叶轮选用高强度锻铝/钛合金。经台架实验验证，叶轮多变效率达85%，并通过115%超速试验。采用变频调节方式，取消导叶片，采用变频调节，启动电流小、调节范围宽。叶轮与轴直连，动力传递效率100%，运行轻巧节能。

Optimized according to triple-flow theory, the impeller is made of high-strength forged aluminum or titanium alloy. Bench tests have verified a multi-stage efficiency of up to 85%, and it has passed a 115% overspeed test. Using variable-frequency control and eliminating guide vanes, the impeller features low start-up current and a wide regulation range. Directly connected to the shaft, power transmission efficiency is 100%, resulting in lightweight and energy-saving operation.

空气箔片轴承
Airfoil Bearing

●空气悬浮轴承以空气替代润滑油，支持高温高速运行，具备启动灵活、运行成本低、无油无摩擦、寿命长等优势。启动时轴承与轴接触，达到起飞转速后悬浮，实现无摩擦运转。

Air foil bearings use air instead of lubricating oil, supporting high-temperature and high-speed operation. They offer advantages such as flexible start-up, low operating cost, oil-free and frictionless operation, and long service life. During start-up, the bearing contacts the shaft; once reaching take-off speed, the shaft is levitated, enabling frictionless operation.

高速永磁电机
High-Speed Permanent Magnet Motor

●采用高效永磁电机，效率超95%，支持精密调速。结构紧凑、转速高，并采用更安全可靠的空气冷却，便于维护。

Equipped with a high-efficiency permanent magnet motor with over 95% efficiency, supporting precise speed control. Compact and high-speed, it uses safe and reliable air cooling for easy maintenance.

工作原理
working theory

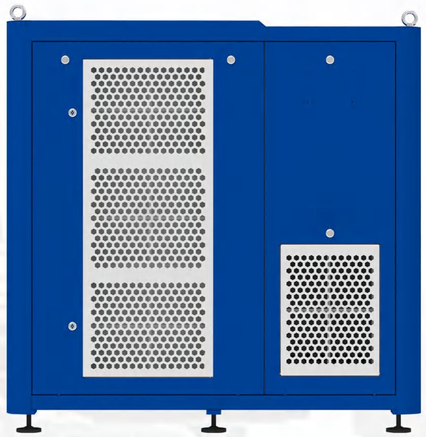

空气悬浮鼓风机采用空气悬浮轴承技术，鼓风机启动时转子先高速旋转，达到6000-10000RPM以上，转子与空气箔片轴承之间产生压缩空气膜，使转子运行时完全悬浮于气膜之上，实现零摩擦、零磨损。结合高速永磁电机直接驱动三元流叶轮，无需齿轮箱、联轴器和润滑油系统。其核心优势在于高效节能（省电30%以上）、终身免维护、100%无油洁净、超低噪音运行，并通过智能变频控制实现风量风压的精准、高效调节。

The airfoil bearing turbo blower adopts the air suspension bearing technology. When the blower starts, the rotor rotates at a high speed of 6000-10000 RPM or above. A compressed air film is generated between the rotor and the air foil bearing, allowing the rotor to be completely suspended above the air film during operation, achieving zero friction and zero wear. Combined with a high-speed permanent magnet motor for direct drive of the three-dimensional flow impeller, there is no need for a gearbox, coupling, or lubrication system. Its core advantages lie in high efficiency and energy saving (up to 30% power saving), lifetime maintenance-free, 100% oil-free cleanliness, ultra-low noise operation, and precise and efficient regulation of air volume and pressure through intelligent frequency conversion control.

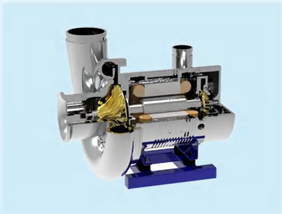
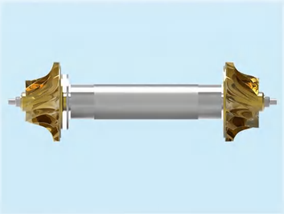

流量压力范围
Product series & specifications

空气悬浮离心鼓风机参数表
Air-Supported Centrifugal Blower Parameter Table

压力 Pressure / 型号 Model	40kPa	50kPa	60kPa	70kPa	80kPa	90kPa	100kPa
HKB15 最大流量m3/min Max flow(m3/min)	11.6	10.6	9.8	8.8	8	/	/
HKB20 最大流量m3/min Max flow(m3/min)	15.6	14.6	13.4	12.2	11	/	/
HKB30 最大流量m3/min Max flow(m3/min)	25	23	21.3	19.5	18	/	/
HKB50 最大流量m3/min Max flow(m3/min)	41	38	35	32	29	24	22
HKB75 最大流量m3/min Max flow(m3/min)	63	58	53.5	49	44	39	36
HKB100 最大流量m3/min Max flow(m3/min)	83	76	70	64	58	51	47
HKB125 最大流量m3/min Max flow(m3/min)	78	88	82	76	70	/	/
HKB150 最大流量m3/min Max flow(m3/min)	124	114	106	97	88	76	70
HKB200 最大流量m3/min Max flow(m3/min)	158	147	136	126	114	103	96
HKB250 最大流量m3/min Max flow(m3/min)	130	146	164	153	142	111	106
HKB300 最大流量m3/min Max flow(m3/min)	240	225	208	190	172	150	140
HKB400 最大流量m3/min Max flow(m3/min)	320	300	275	252	230	198	184

备注：

1.该选型仅供参考，最终签合同或签订技术协议需发给技术部复核选型。

2.该压力为不包含海拔修正的压力参数，如使用现场超过500米海拔，需发由技术部复核海拔修正参数。

Note:

1. The selection is for reference only, and the final contract or technical agreement shall be sent to the technical department for review and selection.

2. The pressure is a pressure parameter that does not include altitude correction. If the site is used at an altitude of more than 500 meters, the altitude correction parameter should be reviewed by the technical Department.

核心技术
Key technology

空气悬浮主机结构
Air suspension blower body structure

区分item	说明description
电动机种类 motor type	高速永磁电机 high speed permanent magnet motor
变频器种类 VFD type	高频矢量变频器 High-Frequency Vector Variable-Frequency Drive
旋转速度 rotary speed	20000～80000rpm
噪音度 noise level	小于80dB
产品型号 product model	15~400kW

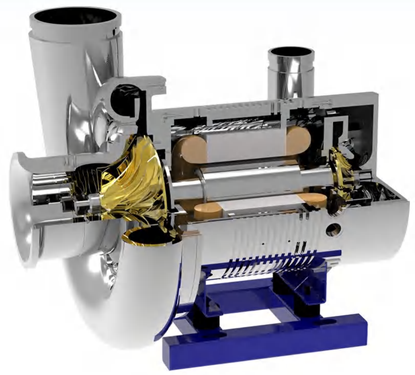

空气箔片轴承
Airfoil Bearing

空气悬浮轴承使用的是空气浮力而非润滑油，是利用周围的空气代替润滑油，因此可在更高温度、高速度下运转。空气悬浮轴承的优势在于启动灵活和低成本运行，并且无机械摩擦，无需润滑油，无振动，噪音低，寿命长。

鼓风机启动时，轴承与轴存在短暂接触摩擦，属于摩擦接触，到达起飞转速后，主轴悬浮，轴承与轴无接触摩擦，转子处于悬浮状态。

Airfoil bearings use air buoyancy instead of lubricating oil, relying on surrounding air to replace oil, allowing operation at higher temperatures and higher speeds. The advantages of airfoil bearings include flexible startup and low operating cost, with no mechanical friction, no need for lubricating oil, no vibration, low noise, and long lifespan.
During blower start-up, the bearing has brief contact friction with the shaft, which is normal frictional contact. Once take-off speed is reached, the main shaft levitates, eliminating contact friction; the rotor operates in a suspended state.

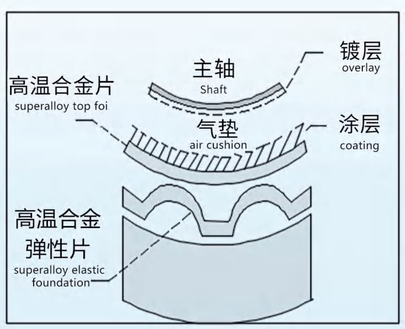

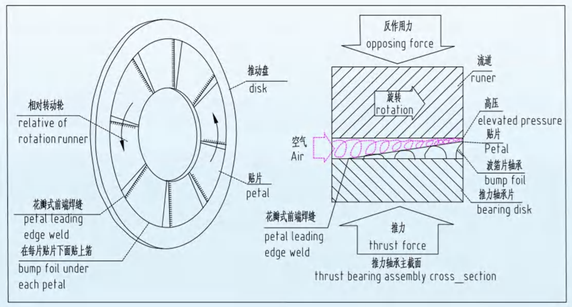

高速永磁电机
High speed permanent magnet motor

●高效永磁电机，效率高达95%以上，可进行精密的速度控制。运用最小化设计，转速快，采用比水冷却更可靠的空气冷却，使设备维护更便捷，设备运行更安全。

High-Efficiency Permanent Magnet Motor, its efficiency exceeds 95% and supports precise speed control. Designed with minimalistic structure, it achieves high rotational speeds and uses air cooling, which is more reliable than water cooling, making maintenance easier and operation safer.

自动化智能控制系统
Auto control system

采用电机与变频器调速控制系统，PLC自动调节风量风压，使风机工作范围内达到最佳经济运行状态。

控制系统对转速、风压、风量、温度等进行自检，具备防喘振和报警自动停机功能。面板控制操作智能简便。

The control system uses motor and VFD to control the rotary speed, PLC adjusts the flow rate and pressure automaticly, to realize the best economic operation condition in the blower's working range.
Control system could test the rotary speed, pressure, flow rate, temperature by itself. It has the function to anti-surge, alarm and automatic shutdown. The control board is easily for operation.

高效离心叶轮
High efficiency centrifugal impeller

采用三元流动理论设计及参数优化，使叶轮效率最大化，工作区域广。

叶轮材质采用高强度锻铝或钛合金，抗变形能力强，且重量轻，极大降低了运行耗电量。

叶轮经五轴数控加工中心精密加工而成，精密制造的叶轮，具有高强度，高气动效率，低磨损的特点，叶轮全部经过防腐处理。

我们设计的每一个型号的叶轮都经过长期的台架实验，确保其气动性能高效可靠，叶轮多变效率可达85%并通过115%超速试验测试。

采用变频调节方式，取消了导叶片调节，启动电流更小，鼓风机的可调范围更宽。

叶轮与轴直接连接，动力传递效率为100%。

Using triple-flow theory and parameter optimization, impeller efficiency is maximized across a wide operating range. The impeller is made of high-strength forged aluminum or titanium alloy, providing excellent deformation resistance while keeping weight low, greatly reducing operational power consumption.
Machined on a five-axis CNC center for precision, the impeller combines high strength, high aerodynamic efficiency, and low wear. All impellers are corrosion-protected.
Each model undergoes long-term bench testing to ensure high and reliable aerodynamic performance. Multi-stage efficiency can reach 85% and passes 115% overspeed tests.
Variable-frequency control eliminates guide vane adjustment, resulting in lower start-up current and a wider blower regulation range.
Direct connection between impeller and shaft ensures 100% power transmission efficiency.

鼓风机工作环境和安装示意图
Blower working environment and installation diagram

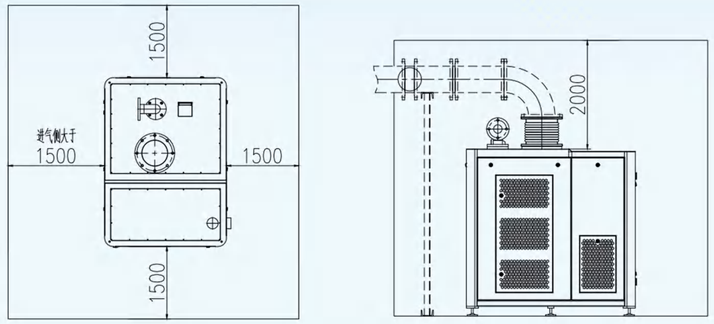

鼓风机安装于一个相对干净和干燥的室内区域，并留有足够的空间来确保空气流通。请勿将鼓风机安装于室外或暴露在雨、雪和潮湿的环境中。若不具备上述条件，请在安装前咨询我公司。

The blower is installed in a relatively clean and dry indoor area with sufficient space to ensure air circulation. Do not install the blower outdoors or exposed to rain, snow, and humidity. If the above conditions are not available, please consult our company before installation.

01. 空气悬浮鼓风机的推荐运行环境温度为-10°C～45°C。 如果环境温度始终低于 0°C，请在鼓风机房增加供暖设备；如果环境温度始终高于 35°C，请务必加强鼓风机房的通风，保证室内热量的散发。

The recommended operating ambient temperature of the air suspension centrifugal blower is -10 °C ～ 45 °C. If the ambient temperature is always lower than 0 °C, please add heating equipment in the blower room; if the a mbient temperature is always higher than 35 ° C, be sure to strengthen the ventilation of the blower room to ensure the indoor heat dissipation.

02. 为保证鼓风机可靠工作及安装、维护与保养的方便性，鼓风机四周应有一定的空间，推荐最小的预留空间范围见图 ，建议在此基础上适当的增加鼓风机房的面积，可降低房间回声。

In order to ensure the reliable operation of the blower and the convenience of installation and maintenance, there should be a certain amount of space around the blower. The recommended minimum reserved space is shown in the figure. It is recommended that the area of the blower room be appropriately increased to reduce Room echo.

03. 受制于电子元器件及流体部件性能，推荐将鼓风机安装于海拔小于1000米的地区。如果不得不安装于海拔大于 1000 米的区域，请在安装前咨询我公司工程师。

Subject to the performance of electronic components and fluid components, it is recommended to install the blower at an altitude of less than 1000 meters. If you have to install in an area with an altitude of more than 1000 meters, please consult our engineers before installation.

04. 鼓风机应尽量安装在洁净的场所，灰尘多会缩短入口过滤器的使用寿命， 导致电机发热严重或过滤器频繁更换。

The blower should be installed in a place as clean as possible. The dust will shorten the service life of the inlet filter, which will cause the motor to generate severe heat or the filter to be replaced frequently.

应用领域
Application area

广泛应用于污水处理、石油、冶金、制药、煤炭、化工、纺织、印染、食品、水泥、电力行业。

Widely used in waste water treatment, oil, metallurgy, medicine, coal ,chemical, textile, printing,food,cement,electric power.

污水处理
sewage treatment

水泥
Cement

造纸
Paper

纺织印染
Textile

热电
Thermoelectric

石油化工
Petrochemical

食品制造
food manufacturing

制药
Pharmaceutical

电子
Electronic

电镀
Plating

钢铁冶炼
Steel smelting

品质保障
Quality Assurance

推进工业文明
PROMOTING INDUSTRIAL CIVILIZATION

共创美好未来
CREATING A BETTER LIFE TOGETHER

华东风机拥有先进的检测、试验设备,践行“设计开发一测试验证一运行优化一推向市场一持续创新”的生产制造理念，实现对空气箔片轴承、大功率高速永磁同步电机、高效离心叶轮等关键设计结果的全方位检验和测试，从而保证所开发的空气悬浮鼓风机在稳定性、可靠性方面具有强大的保障。

Huadong Blower has advanced testing equipment, and implements the manufacturing concept of "design and development - testing and verification - operation optimization - market introduction - continuous innovation", realize the all-round inspection and testing of key design results to the air foil bearing, high-power high-speed permanent magnet synchronous motors, and high-efficiency centrifugal impellers, which guarantees the stability and reliability of the developed air suspension blower.

华东风机始终坚持永远比客户期待要好；打造及时、专业、愉悦、周到的服务理念；一切以超越客户需求为使命，为结果负责！

Huadong Blower always insists on always being better than customers' expectations;creating a timely, professional, pleasant and thoughtful service concept. Everything is based on the mission of exceeding customer needs and is responsible for the results!

资质荣誉
Qualifications and honors

公司累计获得荣誉称号超过100项，拥有与主导产品相关的知识产权100余项，其中，发明专利50多项，并通过ISO9001国际质量管理体系认证、ISO24001环境管理体系认证、ISO45001职业健康安全管理体系认证、两化融合管理体系认证、知识产权管理体系认证、欧盟CE认证和EAC认证。

Our company has accumulated more than 100 honorary titles, and has more than 100 intellectual property rights related to leading products, including more than 50 invention patents. They have passed ISO9001 International Quality Management System Certification, ISO24001 Environmental Management System Certification, ISO45001 Occupational Health and Safety Management System Certification, Two Integration Management System Certification, Intellectual Property Management System Certification, EUCE Certification and EAC Certification.

重点合作伙伴
Key partners

上万家客户的共同选择，服务客户永无止境。
A common choice from 10,000 customers ,serving customers endlessly.

中国石油
中国海油 CNOOC
sinoma 中国中材
中粮 COFCO
中国建材
中核集团 CNNC
中国节能 CECEP
中化 sinochem
中国三峡 China Three Gorges Corporation
中国水务 CHINA WATER
CUCC 中联水泥
MCC 中国中冶
光大水务 Everbright Water
CONCH 海螺水泥
CNSG 中盐集团
BAOWU 宝武水务
中泰化学 ZHONGTAI CHEMICAL

企业文化
Enterprise culture

企业文化：
诚信、踏实、优质、一流

经营理念：
追求卓越无止境，与时俱进创未来

创业动力：
用爱心做事业，用感恩的心做人

团队理念：
负重领先，默契信任，风险共担

Enterprise culture:
Honest, Surefooted, Superior, First-class

Business philosophy:
The pursuit of excellence is endless and we keep pace with the times to create the future

Entrepreneurial motivation:
Do business with love and be a person with a grateful heart

Team philosophy:
Leading the charge, tacit trust, and shared risks

华东与员工心连心
Huadong Blower is heart-to-heart with its employees

经典合作案例
Classic cooperation